R & D facts

U.S. Department of Energy
National Energy Technology Laboratory

Computational Energy Science Focus Area

10/2000

Simulation and Modeling Team

Capabilities

The Simulation and Modeling Team develops and uses mathematical models to study advanced combustors, gasifiers, particle-gas separation devices, and other fluid-particle reactors. Its focus is the fossil fuel utilization industry, but the models could be used by any industry that uses fixed-, moving-, fluidized-, and circulating-bed reactors. The team works closely with other NETL teams, NETL contractors, and CRADA partners to improve its models and to transfer that knowledge to industry. In addition to answering immediate questions, the team's goal is to develop mathematical tools that predict and troubleshoot the performance of reactors, help with their design and scale-up, and perform real-time analysis to control them.

The Simulation and Modeling Team primarily uses two codes: FLUENT and MFIX. They are based on first principles, as much as possible, and solve the transient equations of transport. Consequently, FLUENT and MFIX predict the value of every variable during each instant at every point in the reactor. They are applicable to many operating conditions and reactor geometries.

Simulations

Example #1: This figure shows a "snap shot" of NETL's circulating fluidized bed as simulated by MFIX. Air is introduced at the bottom left, and carries solids upward through the riser section. These solids are transported across the top to the cyclone section on the right where the solids are separated from the transporting gas. The separated solids fall freely into the stand pipe on the right. Solids at the bottom of the stand pipe move through the slanted channel called the "J" valve, which is a non-mechanical valve used to control the flow of the solids into the bottom of the riser, thus completing the loop.

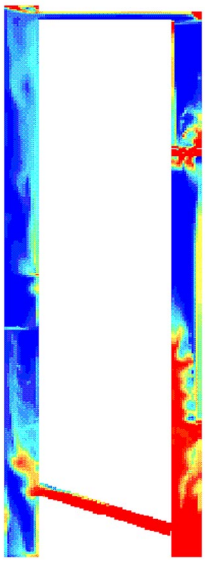

One novel aspect of the simulation deals with separating the circulating solids from the transporting gas. Cyclones are typically used to achieve this type of separation, but such devices are inherently three- dimensional. However, expanding the simulation from the current two dimensions into three dimensions would have increased the computational time sixfold. Instead of modeling the cyclone directly, the simulation set aside a region at the top of the stand pipe where a horizontal force is imparted to the solids, mimicking the centrifugal force of a cyclone. This force causes the solids to move to the edge of the stand pipe in a manner analogous to that of a cyclone, but without the time penalty associated with a three-dimensional simulation.

CONTACT POINTS

Edward J. Boyle
Research Chemist
(304) 285-4000
edward.boyle@netl.doe.gov

R. Diane Newlon
Program Manager
Technology Transfer
(304) 285-4086
roberta.newlon@netl.doe.gov

ADDRESS

National Energy Technology Laboratory
3610 Collins Ferry Road
P.O. Box 880
Morgantown, WV 26507-0880
(304) 285-4469 fax

626 Cochrans Mill Road
P.O. Box 10940
Pittsburgh, PA 15236-0940
(412) 386-4604 fax

WEBSITE

www.netl.doe.gov/products/r&d

Simulation and Modeling Team

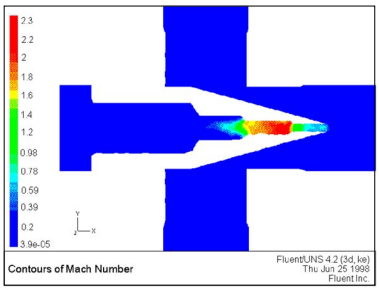

Example #2: A critical flow orifice used to reduce pressure on a fluidized-bed gasifier was modeled using FLUENT to determine if it functioned as designed. The bullet-shaped design of the orifice was intended to allow sampling of an ash-laden hot gas stream while avoiding the problem of ash particles plugging the orifice. A question to be answered was whether the bullet-shaped geometry permitted representative sampling of the gas stream or caused particle separation. The results of the simulation showed that the critical flow orifice did allow for representative sampling under the conditions assumed.

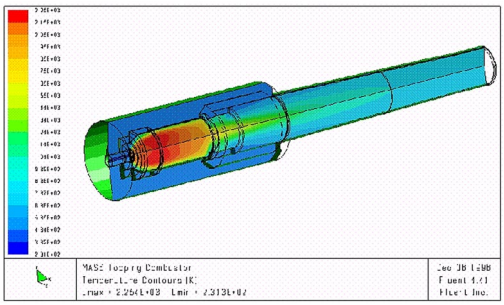

Example #3: The Simulation and Modeling Team was asked to investigate the development of high temperatures in parts of a multiannular swirl-burner topping combustor. This figure illustrates FLUENT's predictions for temperature contours in a plane through the combustor. Fuel is mixed with air and swirled at the upstream end. Additional air is added downstream to stage the combustion of the fuel so as to minimize nitrogen oxide formation.

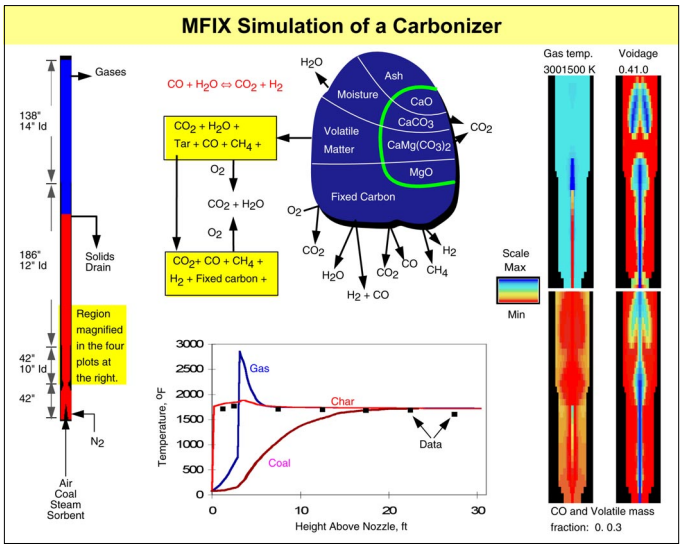

Example #4: MFIX can model chemical reactions as well as multiphase hydrodynamics. One version of MFIX contains the chemistry for coal combustion, another the chemistry for catalytic cracking of petroleum, and still another the chemistry for the absorption of hydrogen sulfide by a metal oxide. This figure shows the complicated chemistry that MFIX uses to simulate a coal gasifier. From left to right, the figure shows the dimensions and flow rates for a commercial coal gasifier, the chemical reactions contained in MFIX, and instant-in-time representative results. MFIX reports all the field variables: temperature, pressure, concentrations of all species, and gas and solid phase velocities.

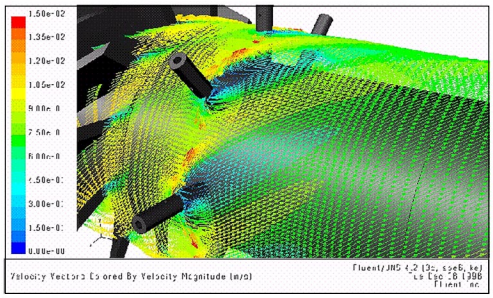

Example #5: Detailed steady-state and transient FLUENT simulations are being performed to study flow and mixing in a fuel nozzle. This work was initiated based on experimental findings that the aerodynamic effects of the fuel injector could not be easily quantified without a detailed understanding of processes in the fuel injector. In this figure, air enters from the left. Fuel is injected through tiny ports along the length of the spokes that are visible in the figure. Shown are gas velocity vectors and air and fuel concentrations at a particular cylindrical surface of the mixing nozzle.

Example #6: A circulating fluidized bed (CFB) system operated at NETL is used to collect experimental data and to test the performance of various CFB components. A lumped parameter model was developed at NETL for describing this CFB (and other similar CFBs). The model runs quickly on a PC and predicts the pressure drop around the circulation loop and other operating characteristics of a CFB. The predicted pressure drop data are automatically compared with experimental data to calibrate the model.

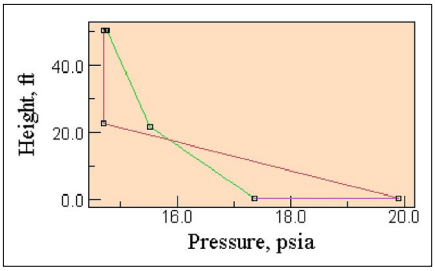

Opportunities

The expertise of the Simulation and Modeling Team is available to research partners and NETL contractors. The executable version of MFIX is available upon request. Researchers who want the MFIX source code should contact the Energy Science and Technology Software Center, P.O. Box 1020, Oak Ridge, TN 37831-1020, or one of NETL's contact persons.